Hawthorn Geddes
engineers & architects ltd

In reply please quote: 10241

20 November 2020

Stainless Sports Ltd
stainlesssports5@gmail.com

Attention: Alan Robertson

STORMWATER ATTENUATION
FOR A PROPOSED BUILDING & DRIVEWAY
AT 35 JERVOIS ST, DARGAVILLE (LOT 2, DP 407743)

Purpose

The purpose of this report is to summarise the engineering design for detention and disposal of stormwater runoff from the proposed building and driveway at 35 Jervois St, Dargaville (Lot 2, DP 407743), in accordance with the Kaipara District Council Engineering Standards 2011 (KDC ES) and in support of resource and building consent applications.

This report has been revised from that of the report dated 9 December 2015 to reflect the increase in proposed impervious area on the site.

Proposal

The proposal is to construct a 3-unit residential dwelling and driveway with a combined impervious area of approximately 590m² at 35 Jervois Street.

Stormwater Design

We have designed a solution for the proposed roof, driveway and patio areas based on on-site attenuation of the post-development peak flows using sub-base granular storage, discharging to the existing stormwater network. The attenuation has been designed to address the runoff generated by 20%, 10% and 1% AEP (5, 10 and 100 year ARI) storm events, limiting the flows to the pre-development runoff rates.

The site was modelled in HydroCAD adopting modified rational method (1:2 rise:fall) for pre- and post-development and using rainfall data from Table 6.4 of the KDC ES.

Pre-Development

The site covers 932m² and includes a small dwelling (107m²) and 2 garages/sheds (47m²). A predevelopment area of 590m² was modelled for the proposed development, being 154m² of existing impervious and 436m² of grassed area. The clay soil was assessed as hydrologic soil group D. For details of runoff coefficients we refer to the attached HydroCAD report summary sheets.

The pre-development runoff rates were defined by applying 20%, 10% and 1% AEP storm events from Table 6.4 of the KDC ES, with a 60min duration. The resulting pre-development peak flow from the proposed impervious area is calculated as 4.6, 5.4 and 11.2 ℓ/sec for the 20%, 10% and 1% AEP storm events respectively. These are used as the upper limits for controlled runoff post-development peak flows.

Post Development

The site has been modelled with an impervious area of 590m². The post-development runoff rates were defined by applying 20%, 10% and 1% AEP storm events from table 6.4 in the KDC ES.

All runoff from the proposed impervious areas (driveway, patios and roof) is to be captured via site reticulation to a sub-base granular storage trench of dimensions 105 m² x 0.35 m H. Discharge will be via 2 staged orifices, with the 5yr ARI event controlled through a 65mm orifice at 100mm below the base level of the storage, the 10yr controlled by a 45mm orifice at 255mm above the invert of the first orifice and the 100yr ARI event controlled by the 100 mm discharge pipe. Final discharge will be to the reticulated stormwater network adjoining the property.

Results

Pre- and post-development flows for the design events are shown in the table below. Refer to the attached figure and HydroCad report for further details

	Pre Development	**Post Development**
Permeable area (m²)	436	0
Impermeable area (m²)	154	590
	Peak Flow (ℓ/s)	
20% AEP event	4.6	4.2
10% AEP event	5.4	5.3
1% AEP event	11.2	10.0

Refer to the attached HydroCAD summary report and drawings for the construction requirements for the storage trench. Please note that the design includes wrapping the storage trench in geotextile cloth to minimise the risk of ingress of fines into the granular material. It is the owner's responsibility to keep the system clean. Failure to do this will prevent the attenuation from working correctly, ultimately causing the system to fail.

Conclusion

This design meets the requirements of the Kaipara District Council Environmental Engineering Standards 2011 in relation to attenuation of post-development flows.

Limitation

This report has been prepared solely for the benefit of our client Stainless Sports Ltd and the Kaipara District Council in relation to the resource and building consent applications for which this report has been prepared. The comments in it are limited to the purpose stated in this report. No liability is accepted by Hawthorn Geddes engineers & architects ltd in respect of its use by any other person, and any other person who relies upon any matter contained in this report does so entirely at their own risk.

Yours faithfully,

Stacey Gibson
Hawthorn Geddes
engineers & architects ltd

Encl: HydroCAD summary report
Drawing 10241 Sheets C01 and C02 Rev B2

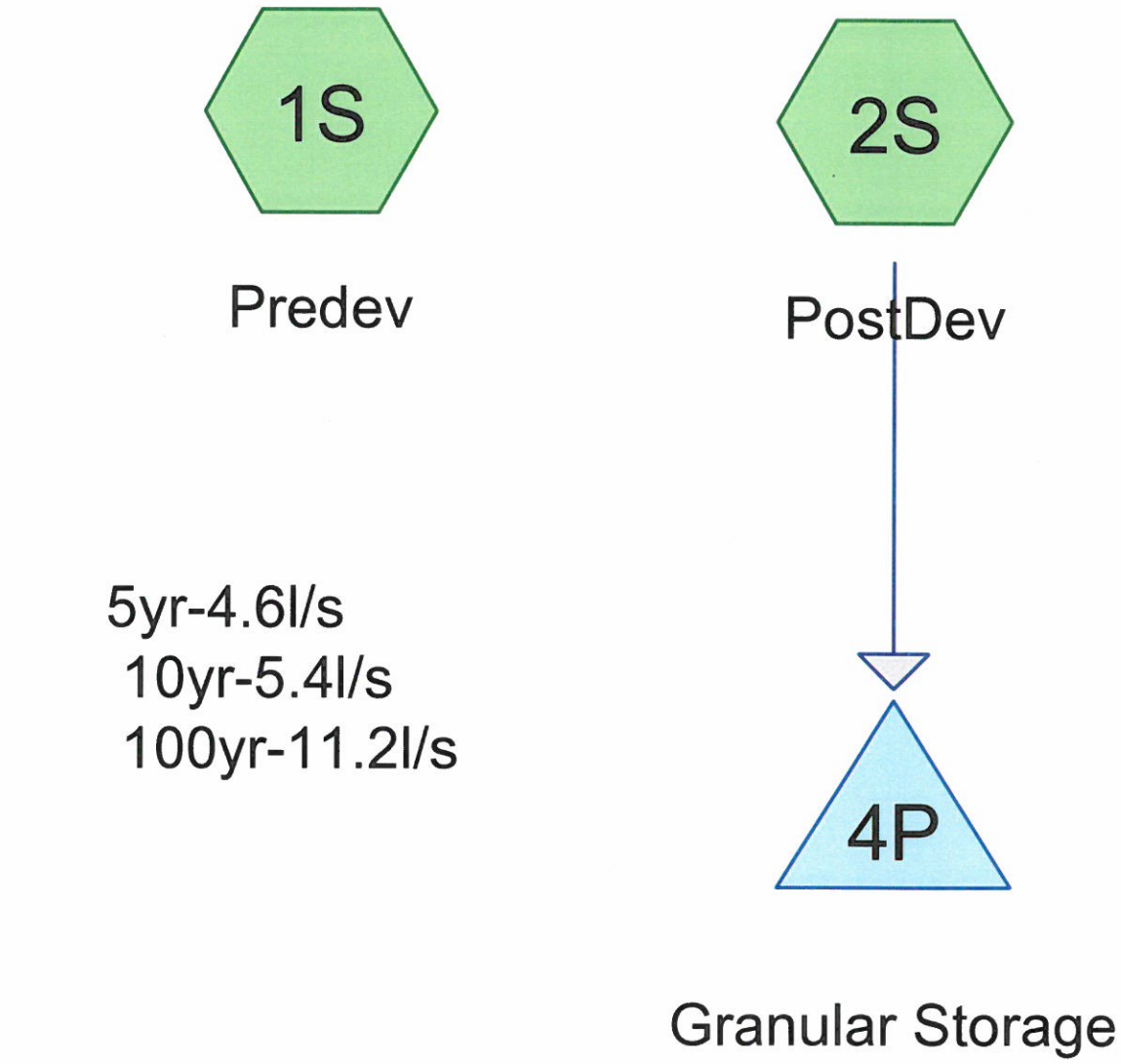

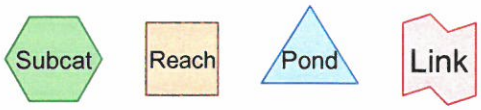

Routing Diagram for 10292 SW Attenuation
Prepared by HP Inc., Printed 20/11/2020
HydroCAD® 10.10-3a s/n 05482 © 2020 HydroCAD Software Solutions LLC

Summary for Subcatchment 1S: Predev

Runoff = 0.0046 m³/s @ 0.17 hrs, Volume= 18.0 m³, Depth= 31 mm

Runoff by Rational method, Rise/Fall=1.0/2.0 xTc, Time Span= 0.00-3.00 hrs, dt= 0.01 hrs
KDC_ES-Dargaville 5-year Duration=60 min, Inten=36.1 mm/hr

Area (m²)	C	Description
436.0	0.72	50-75% Grass cover, Fair, HSG D
154.0	0.96	Existing impervious
590.0	0.78	Weighted Average
436.0		73.90% Pervious Area
154.0		26.10% Impervious Area

Tc (min)	Length (meters)	Slope (m/m)	Velocity (m/sec)	Capacity (m³/s)	Description
10.0					**Direct Entry,**

Subcatchment 1S: Predev

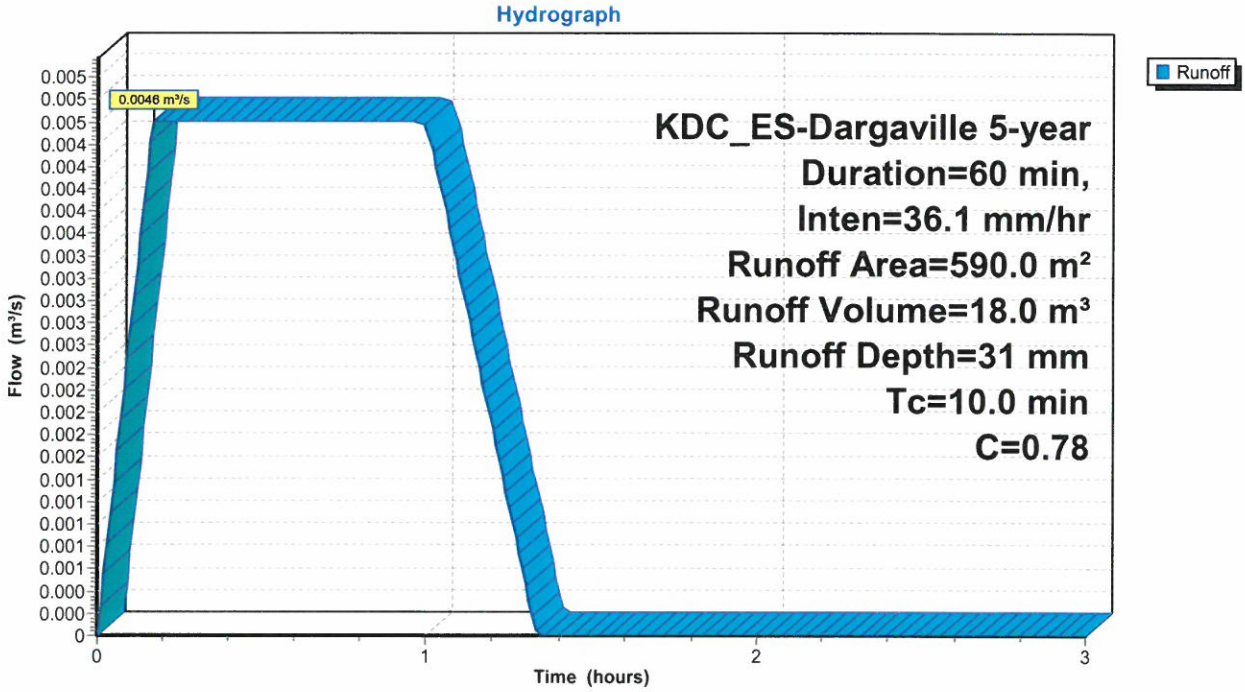

Summary for Subcatchment 1S: Predev

Runoff = 0.0054 m³/s @ 0.17 hrs, Volume= 21.2 m³, Depth= 36 mm

Runoff by Rational method, Rise/Fall=1.0/2.0 xTc, Time Span= 0.00-3.00 hrs, dt= 0.01 hrs
KDC_ES-Dargaville 10-year Duration=60 min, Inten=42.5 mm/hr

Area (m²)	C	Description
436.0	0.72	50-75% Grass cover, Fair, HSG D
154.0	0.96	Existing impervious
590.0	0.78	Weighted Average
436.0		73.90% Pervious Area
154.0		26.10% Impervious Area

Tc (min)	Length (meters)	Slope (m/m)	Velocity (m/sec)	Capacity (m³/s)	Description
10.0					**Direct Entry,**

Subcatchment 1S: Predev

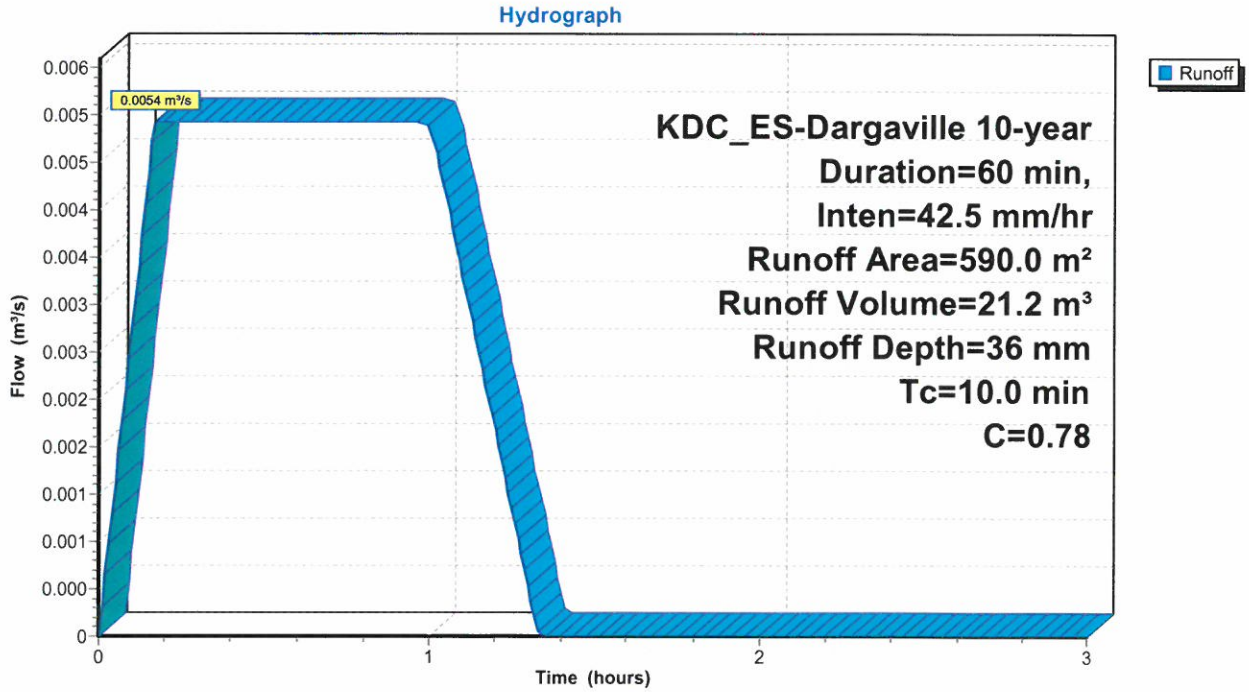

Summary for Subcatchment 1S: Predev

Runoff = 0.0112 m³/s @ 0.17 hrs, Volume= 43.8 m³, Depth= 74 mm

Runoff by Rational method, Rise/Fall=1.0/2.0 xTc, Time Span= 0.00-3.00 hrs, dt= 0.01 hrs
KDC_ES-Dargaville 100-Year Duration=60 min, Inten=70.0 mm/hr, Cf=1.25

Area (m²)	C	Adj	Description
436.0	0.72		50-75% Grass cover, Fair, HSG D
154.0	0.96		Existing impervious
590.0	0.78	0.98	Weighted Average, Frequency Adjusted
436.0			73.90% Pervious Area
154.0			26.10% Impervious Area

Tc (min)	Length (meters)	Slope (m/m)	Velocity (m/sec)	Capacity (m³/s)	Description
10.0					**Direct Entry,**

Subcatchment 1S: Predev

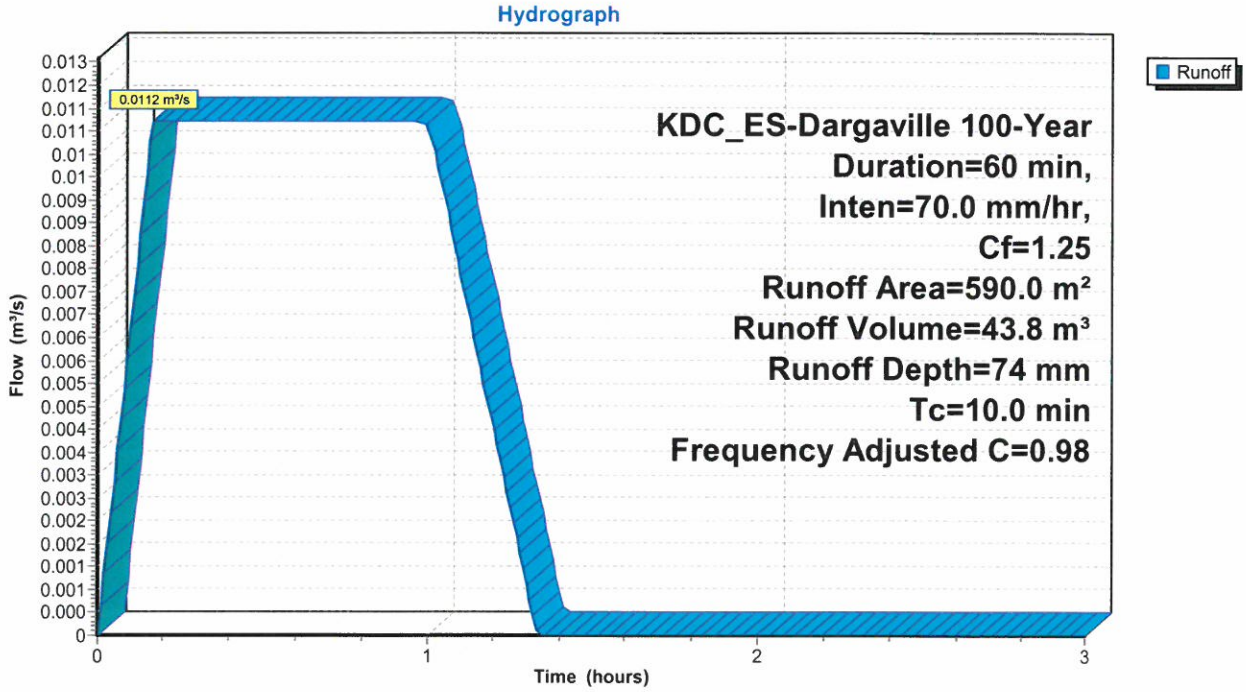

Summary for Pond 4P: Granular Storage

Inflow Area = 590.0 m², 100.00% Impervious, Inflow Depth = 28 mm for 5-year event
Inflow = 0.0078 m³/s @ 0.09 hrs, Volume= 16.7 m³
Outflow = 0.0042 m³/s @ 0.63 hrs, Volume= 16.7 m³, Atten= 46%, Lag= 32.2 min
Primary = 0.0042 m³/s @ 0.63 hrs, Volume= 16.7 m³

Routing by Dyn-Stor-Ind method, Time Span= 0.00-3.00 hrs, dt= 0.01 hrs
Peak Elev= 0.162 m @ 0.63 hrs Surf.Area= 105.0 m² Storage= 8.5 m³

Plug-Flow detention time= 21.2 min calculated for 16.6 m³ (100% of inflow)
Center-of-Mass det. time= 21.3 min (41.6 - 20.3)

Volume	Invert	Avail.Storage	Storage Description
#1	0.000 m	18.4 m³	**1.00 mW x 105.00 mL x 0.35 mH Prismatoid** 36.8 m³ Overall x 50.0% Voids

Device	Routing	Invert	Outlet Devices
#1	Primary	-0.100 m	**100 mm Round Culvert** L= 10.00 m RCP, end-section conforming to fill, Ke= 0.500 Inlet / Outlet Invert= -0.100 m / -0.200 m S= 0.0100 m/m Cc= 0.900 n= 0.012 Concrete pipe, finished, Flow Area= 0.008 m²
#2	Device 1	-0.100 m	**65 mm Vert. Orifice/Grate** C= 0.600 Limited to weir flow at low heads
#3	Device 1	0.155 m	**45 mm Vert. Orifice/Grate** C= 0.600 Limited to weir flow at low heads
#4	Device 1	0.210 m	**100 mm Horiz. Orifice/Grate** C= 0.600 Limited to weir flow at low heads

Primary OutFlow Max=0.0042 m³/s @ 0.63 hrs HW=0.162 m (Free Discharge)
└─**1=Culvert** (Passes 0.0042 m³/s of 0.0077 m³/s potential flow)
  ├─**2=Orifice/Grate** (Orifice Controls 0.0042 m³/s @ 1.27 m/s)
  ├─**3=Orifice/Grate** (Orifice Controls 0.0000 m³/s @ 0.15 m/s)
  └─**4=Orifice/Grate** (Controls 0.0000 m³/s)

Pond 4P: Granular Storage

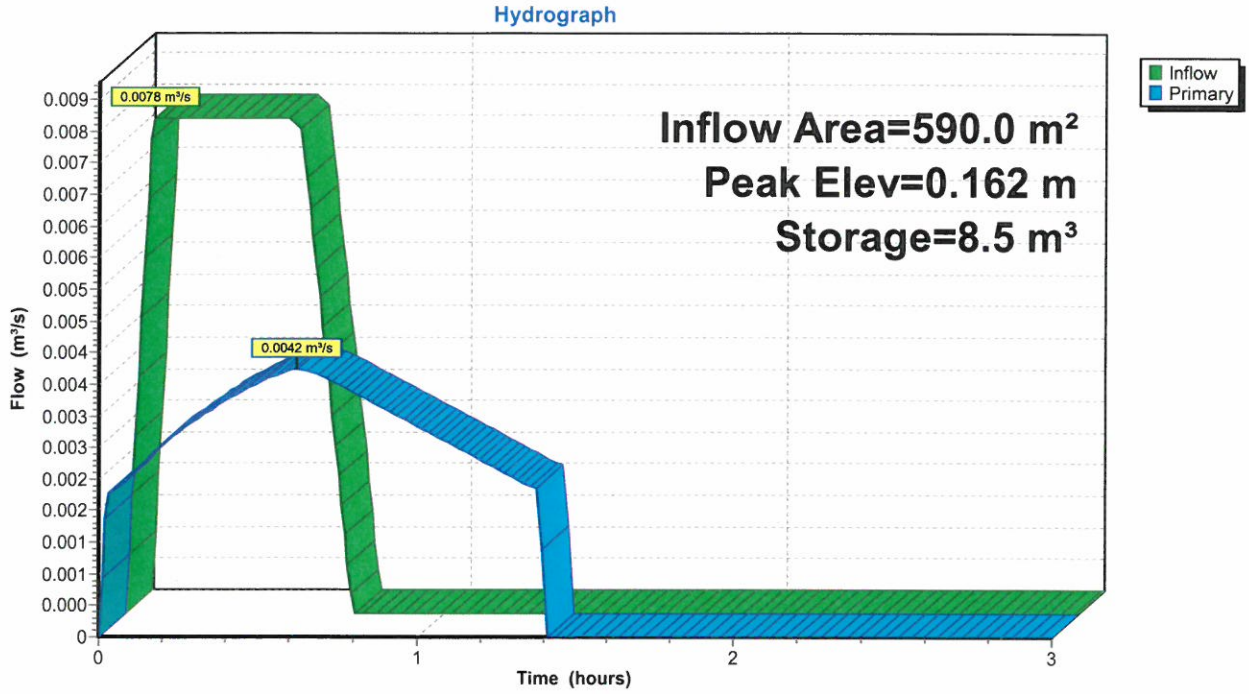

Summary for Pond 4P: Granular Storage

Inflow Area = 590.0 m², 100.00% Impervious, Inflow Depth = 35 mm for 10-year event
Inflow = 0.0088 m³/s @ 0.09 hrs, Volume= 20.4 m³
Outflow = 0.0053 m³/s @ 0.67 hrs, Volume= 20.4 m³, Atten= 40%, Lag= 34.6 min
Primary = 0.0053 m³/s @ 0.67 hrs, Volume= 20.4 m³

Routing by Dyn-Stor-Ind method, Time Span= 0.00-3.00 hrs, dt= 0.01 hrs
Peak Elev= 0.203 m @ 0.67 hrs Surf.Area= 105.0 m² Storage= 10.6 m³

Plug-Flow detention time= 24.1 min calculated for 20.4 m³ (100% of inflow)
Center-of-Mass det. time= 24.3 min (46.1 - 21.8)

Volume	Invert	Avail.Storage	Storage Description
#1	0.000 m	18.4 m³	**1.00 mW x 105.00 mL x 0.35 mH Prismatoid** 36.8 m³ Overall x 50.0% Voids

Device	Routing	Invert	Outlet Devices
#1	Primary	-0.100 m	**100 mm Round Culvert** L= 10.00 m RCP, end-section conforming to fill, Ke= 0.500 Inlet / Outlet Invert= -0.100 m / -0.200 m S= 0.0100 m/m Cc= 0.900 n= 0.012 Concrete pipe, finished, Flow Area= 0.008 m²
#2	Device 1	-0.100 m	**65 mm Vert. Orifice/Grate** C= 0.600 Limited to weir flow at low heads
#3	Device 1	0.155 m	**45 mm Vert. Orifice/Grate** C= 0.600 Limited to weir flow at low heads
#4	Device 1	0.210 m	**100 mm Horiz. Orifice/Grate** C= 0.600 Limited to weir flow at low heads

Primary OutFlow Max=0.0053 m³/s @ 0.67 hrs HW=0.203 m (Free Discharge)
└─**1=Culvert** (Passes 0.0053 m³/s of 0.0083 m³/s potential flow)
  ├─**2=Orifice/Grate** (Orifice Controls 0.0046 m³/s @ 1.38 m/s)
  ├─**3=Orifice/Grate** (Orifice Controls 0.0007 m³/s @ 0.42 m/s)
  └─**4=Orifice/Grate** (Controls 0.0000 m³/s)

Pond 4P: Granular Storage

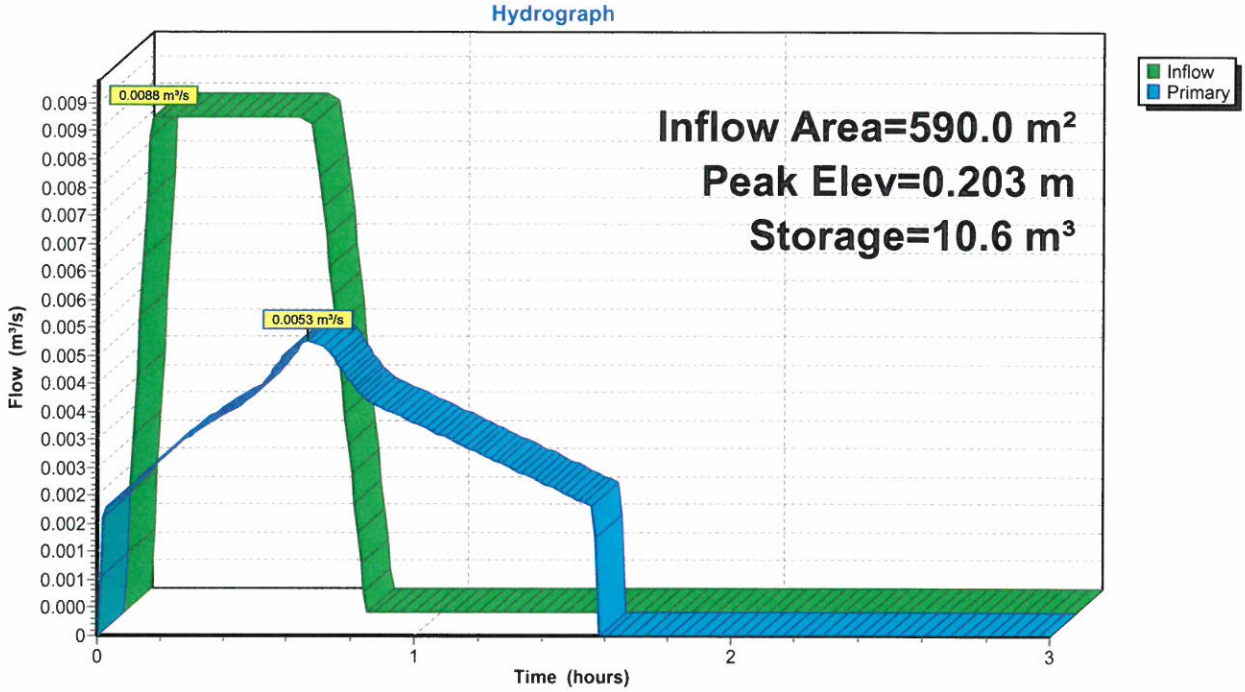

Summary for Pond 4P: Granular Storage

Inflow Area = 590.0 m², 100.00% Impervious, Inflow Depth = 56 mm for 100-Year event
Inflow = 0.0168 m³/s @ 0.09 hrs, Volume= 32.8 m³
Outflow = 0.0100 m³/s @ 0.57 hrs, Volume= 32.8 m³, Atten= 40%, Lag= 28.6 min
Primary = 0.0100 m³/s @ 0.57 hrs, Volume= 32.8 m³

Routing by Dyn-Stor-Ind method, Time Span= 0.00-3.00 hrs, dt= 0.01 hrs
Peak Elev= 0.345 m @ 0.57 hrs Surf.Area= 105.0 m² Storage= 18.1 m³

Plug-Flow detention time= 25.6 min calculated for 32.7 m³ (100% of inflow)
Center-of-Mass det. time= 25.7 min (44.6 - 18.9)

Volume	Invert	Avail.Storage	Storage Description
#1	0.000 m	18.4 m³	**1.00 mW x 105.00 mL x 0.35 mH Prismatoid** 36.8 m³ Overall x 50.0% Voids

Device	Routing	Invert	Outlet Devices
#1	Primary	-0.100 m	**100 mm Round Culvert** L= 10.00 m RCP, end-section conforming to fill, Ke= 0.500 Inlet / Outlet Invert= -0.100 m / -0.200 m S= 0.0100 m/m Cc= 0.900 n= 0.012 Concrete pipe, finished, Flow Area= 0.008 m²
#2	Device 1	-0.100 m	**65 mm Vert. Orifice/Grate** C= 0.600 Limited to weir flow at low heads
#3	Device 1	0.155 m	**45 mm Vert. Orifice/Grate** C= 0.600 Limited to weir flow at low heads
#4	Device 1	0.210 m	**100 mm Horiz. Orifice/Grate** C= 0.600 Limited to weir flow at low heads

Primary OutFlow Max=0.0100 m³/s @ 0.57 hrs HW=0.345 m (Free Discharge)
└─**1=Culvert** (Barrel Controls 0.0100 m³/s @ 1.28 m/s)
  ├─**2=Orifice/Grate** (Passes < 0.0057 m³/s potential flow)
  ├─**3=Orifice/Grate** (Passes < 0.0017 m³/s potential flow)
  └─**4=Orifice/Grate** (Passes < 0.0077 m³/s potential flow)

Pond 4P: Granular Storage

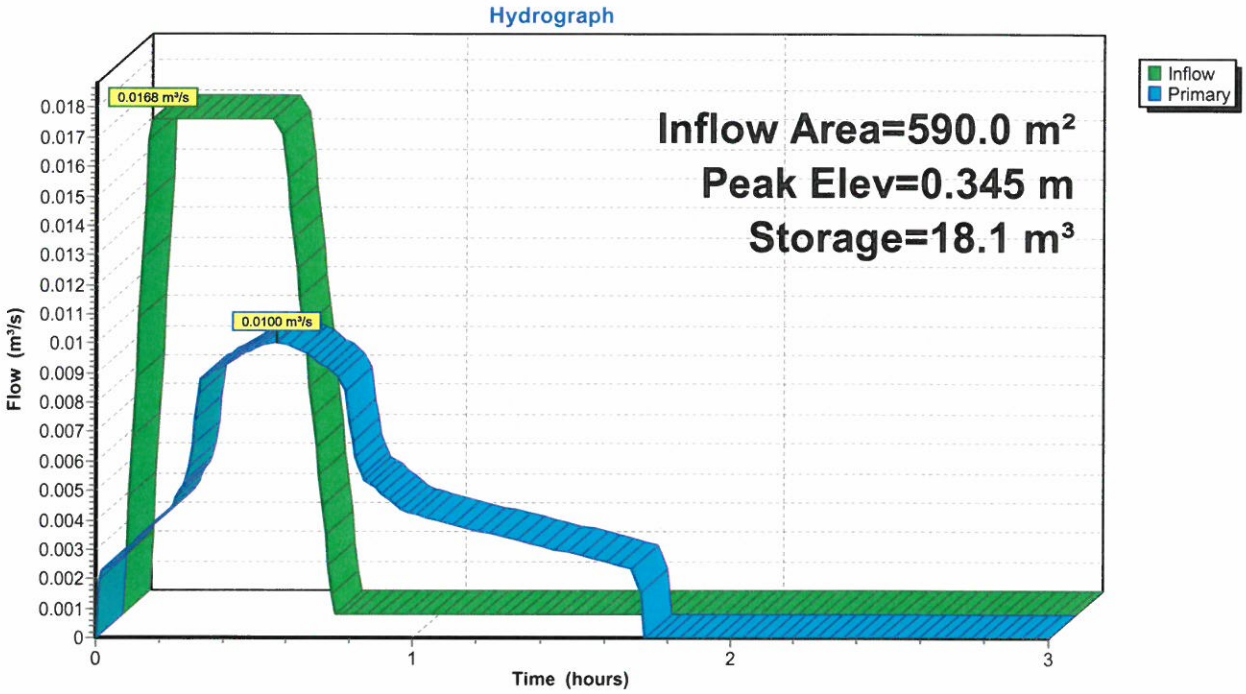

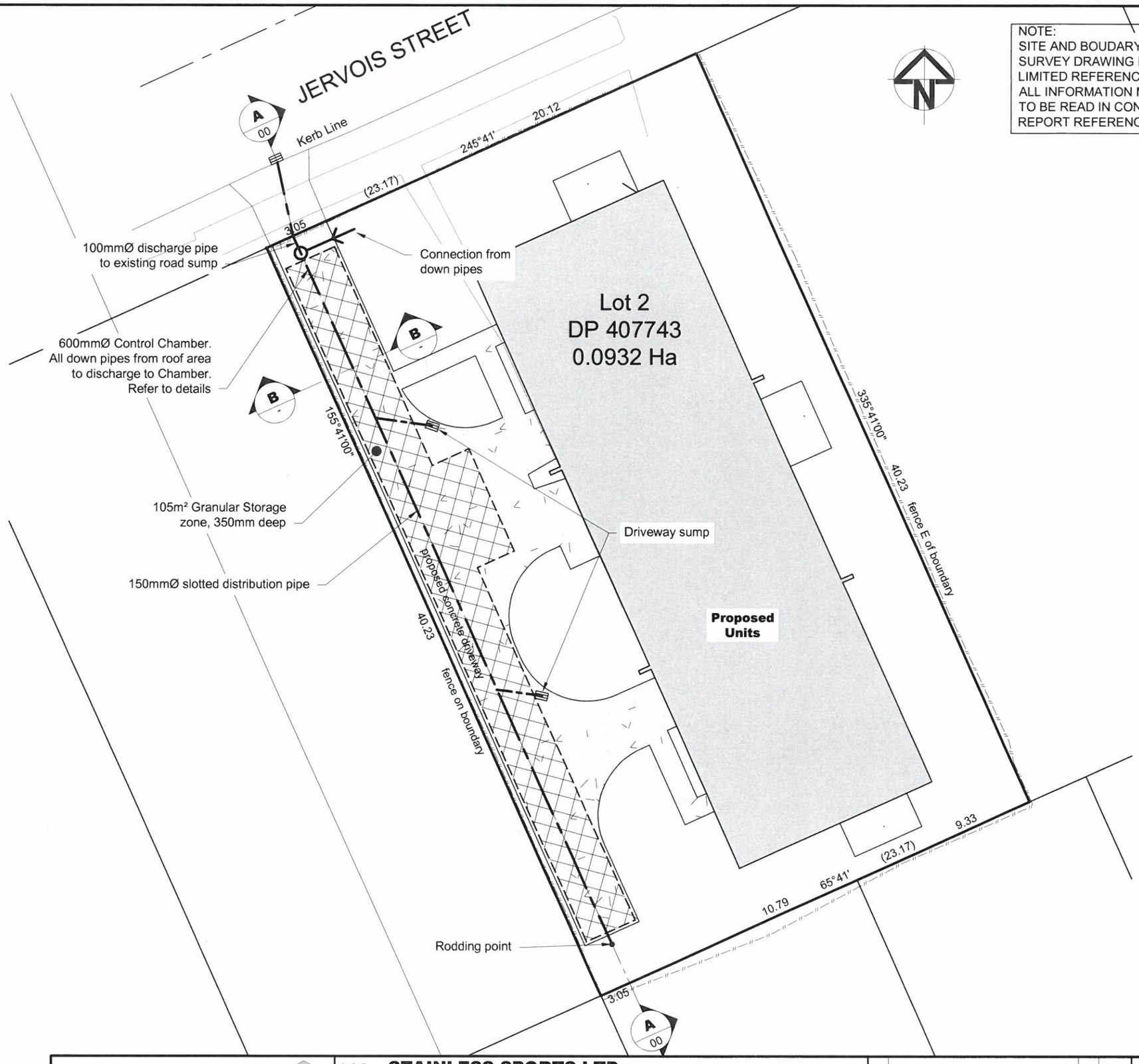

NOTE:
SITE AND BOUDARY INFORMATION ADAPTED FROM SURVEY DRAWING PROVIDED BY BOUNDARY HUNTER LIMITED REFERENCE 4776;
ALL INFORMATION MUST BE CONFIRMED ON SITE;
TO BE READ IN CONJUNCTION WITH HAWTHORN GEDDES REPORT REFERENCE 10241

provisional - not for construction

USE WRITTEN DIMENSIONS. DO NOT SCALE FROM DRAWING.

© HAWTHORN GEDDES ENGINEERS & ARCHITECTS LTD (HGE&A)
THE COPYRIGHT OF THIS DRAWING IS THE PROPERTY OF HGE&A.
REPRODUCTION OF THIS DESIGN OR DRAWING IS NOT
PERMITTED UNLESS PERMISSION IS OBTAINED FROM HGE&A.

Hawthorn Geddes
engineers & architects ltd
7 Selwyn Avenue
Whangarei 0110
Phone: 09 438 7139
hg@hgcs.co.nz
Unit 21a, The Grange
Warkworth 0910
Phone: 09 283 3428
www.hawthorngeddes.co.nz

CLIENT **STAINLESS SPORTS LTD**

PROJECT **STORMWATER REPORT FOR UNITS**
35 JERVOIS STREET, DARGAVILLE

DRAWING **STORMWATER ATTENUATION PLAN AND DETAILS**

REV.	REVISION DETAILS	BY	DATE
B2	ISSUED FOR CONSENT - WITH REVISED REPORT	SG	20/11/20
B1	ISSUED FOR CONSENT	DT	14/12/15

CONSENT

SCALE @ A3: AS SHOWN

DRAWN: DT DEC 2015
CHECK: SG
APPROVED: JAMES BLACKBURN

PROJECT No. **10241**

SHEET **C01**

REV. **B2**

20/11/2020 10:23:37 am K:\10241 Stainless Sports SW Report for Units Jervois St Dargaville\10241 Stormwater Attenuation.dwg

provisional - not for construction

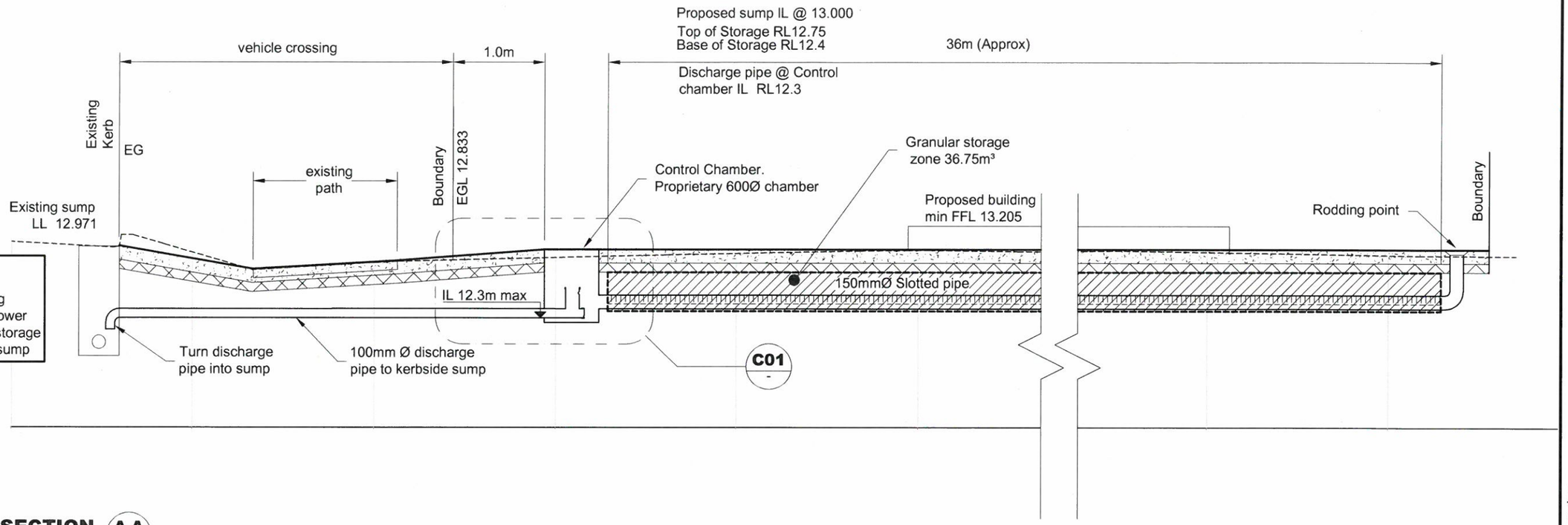

Note
Prior to construction
Confirm that IL of existing sump discharge pipe is lower than IL of the proposed storage discharge pipe entering sump

SECTION A-A
SCALE - NTS

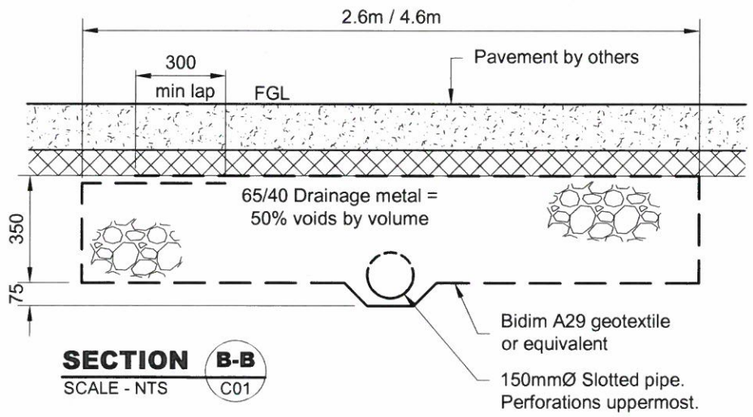

SECTION B-B
SCALE - NTS C01

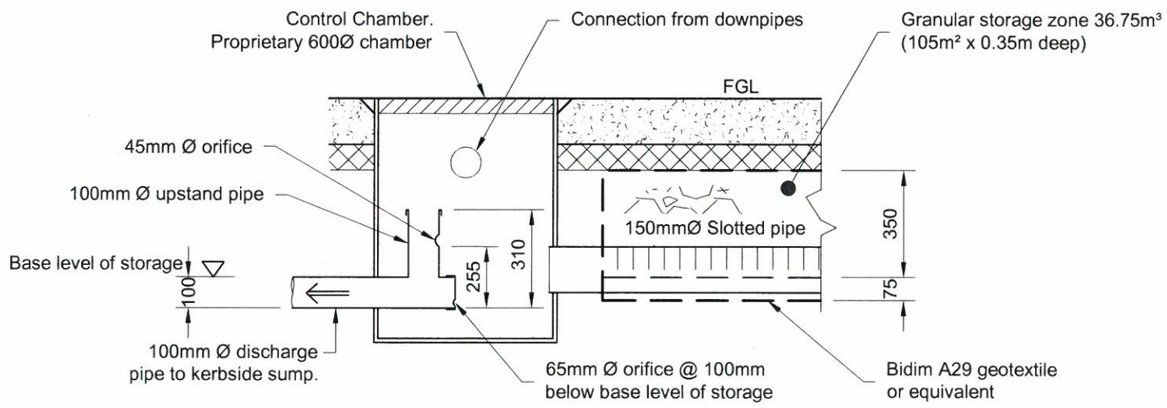

C01 CONTROL CHAMBER DETAIL
SCALE - NTS

USE WRITTEN DIMENSIONS. DO NOT SCALE FROM DRAWING.

© HAWTHORN GEDDES ENGINEERS & ARCHITECTS LTD (HGE&A)
THE COPYRIGHT OF THIS DRAWING IS THE PROPERTY OF HGE&A.
REPRODUCTION OF THIS DESIGN OR DRAWING IS NOT PERMITTED UNLESS PERMISSION IS OBTAINED FROM HGE&A.

Hawthorn Geddes
engineers & architects ltd
7 Selwyn Avenue
Whangarei 0110
Phone: 09 438 7139
hg@hgcs.co.nz
Unit 21a, The Grange
Warkworth 0910
Phone: 09 283 3428
www.hawthorngeddes.co.nz

CLIENT **STAINLESS SPORTS LTD**
PROJECT **STORMWATER REPORT FOR UNITS**
35 JERVOIS STREET, DARGAVILLE
DRAWING **STORMWATER ATTENUATION PLAN AND DETAILS**

REV.	REVISION DETAILS	BY	DATE
B2	ISSUED FOR CONSENT - WITH REVISED REPORT	SG	20/11/20
B1	ISSUED FOR CONSENT	DT	14/12/15

CONSENT

DRAWN	DT DEC 2015	PROJECT No.	10241
CHECK	SG		
APPROVED	JAMES BLACKBURN	SHEET	C02
SCALE @ A3	AS SHOWN	REV.	B2

20/11/2020 10:23:05 am K:\10241 Stainless Sports SW Report for Units Jervois St Dargaville\10241 Stormwater Attenuation.dwg